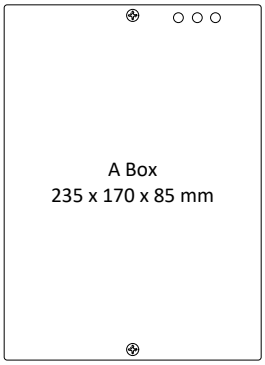
A Box
235 x 170 x 85 mm

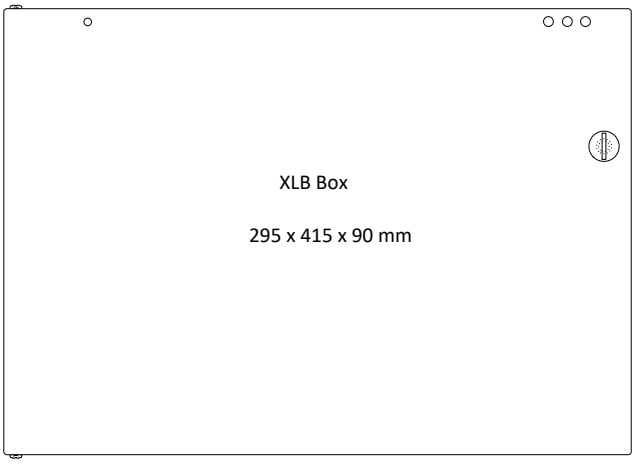
XLB Box
295 x 415 x 90 mm

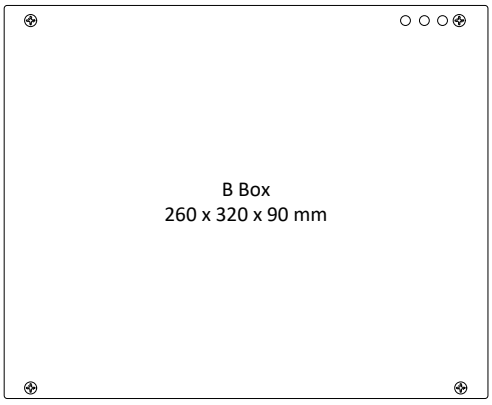
B Box
260 x 320 x 90 mm

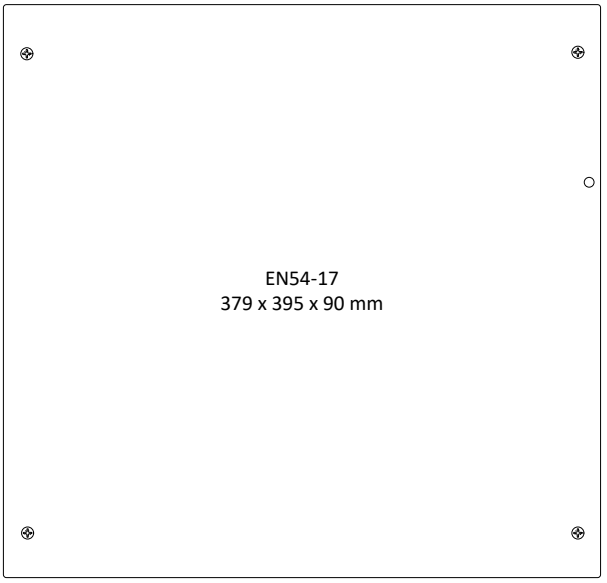
EN54-17
379 x 395 x 90 mm

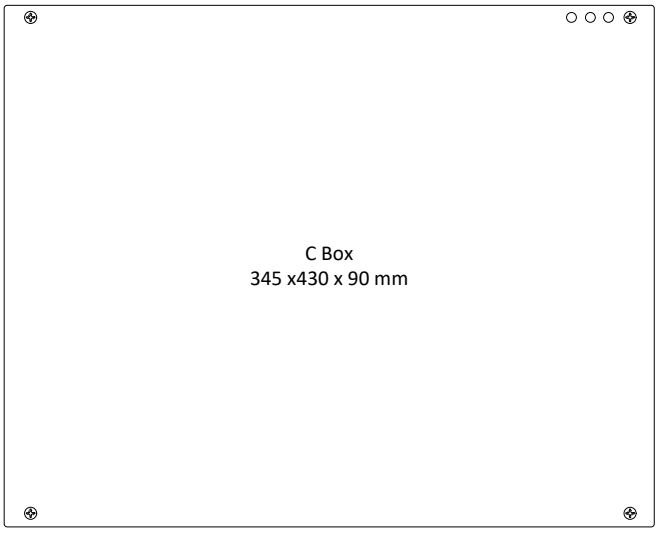
C Box
345 x430 x 90 mm

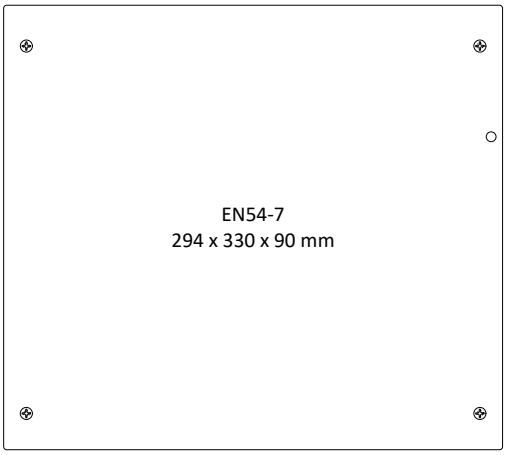
EN54-7
294 x 330 x 90 mm

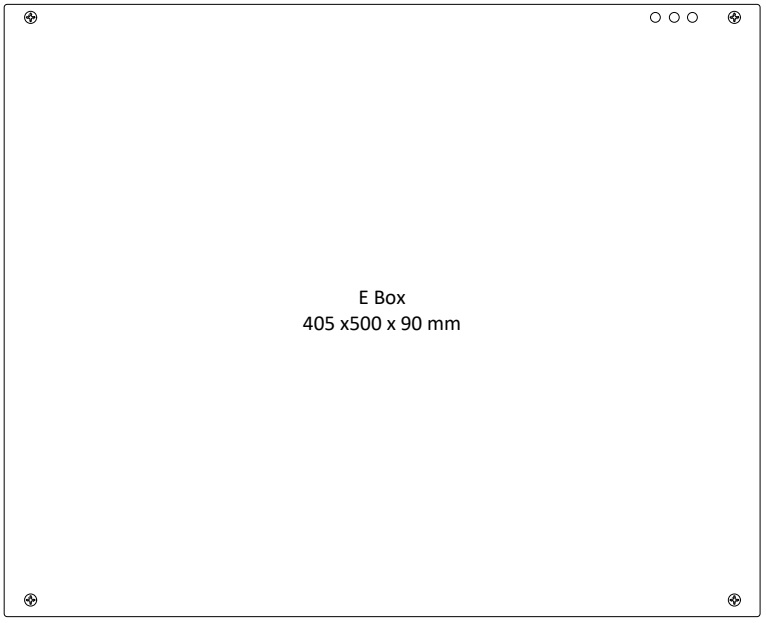
E Box
405 x500 x 90 mm

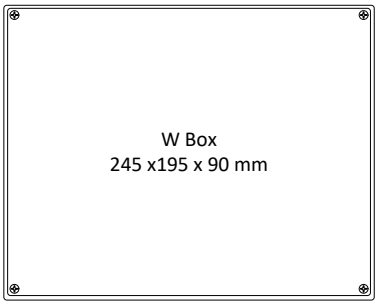
W Box
245 x195 x 90 mm